SCHOTTKY BARRIER RECTIFIER

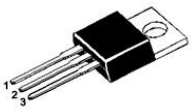

TO-220AB/CT

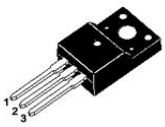

TO-220F/FCT

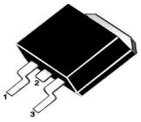

TO-263/DC

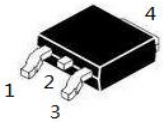

TO-252/CS

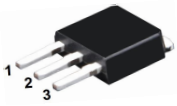

TO-251/D

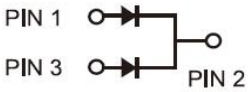

FEATURES

- Low forward voltage
- High current capability
- High forward surge capability
- Low power losses，High efficiency
- Guarding for over voltage protection

RoHS COMPLIANT

APPLICATIONS

Low VF Schottky barrier rectifier are designed for high freqency, miniature switched mode power supplies such as adapters ,lighting and on-board DC/DC conerters

Primary Characteristic

I_O	2*10A
V_{RRM}	45V
I_{FSM}	260A
V_F	0.49V
$T_J$max	150℃
Assembly code	AA

MECHANICAL DATA

- **Case:** Molded plastic
- **Polarity:** As marked
- **Mounting Position:** Any
- **Molded Plastic:** UL Flammability Classification Rating 94V-0
- Lead free in compliance with EU RoHS 2011/65/EU directive
- Solder bath temperature 275℃ maximum,10s per JESD 22-B106

Maximum Ratings (Per Leg) at Ta=25°C unless otherwise specified

Characteristics		Symbol	Value	Unit
Maximum Repetitive Peak Reverse Voltage		V_{RRM}	45	V
Working Peak Reverse Voltage		V_{RWM}	45	V
Maximum DC Blocking Voltage		V_{DC}	45	V
Maximum Average Forward Rectified Current	Per Leg	I_O	10	A
	Total		20	
Peak Forward Surge Current,8.3 ms Single Half Sine-wave Superimposed on Rated Load (JEDEC method)		I_{FSM}	260	A
Operating Temperature Range		T_J	150	°C
Storage Temperature Range		T_{STG}	-40 to +150	°C
Typical Thermal Resistance (Note1) TO-220AB,TO-263,TO-252 TO-220F		$R_{\theta JC}$	 2 4	°C/W

Note1: Thermal resistance from Junction to case per leg mounted on heatsink.

Electrical Characteristics (Per Leg) unless otherwise specified

Characteristics		Symbol	Value		Unit
Forward Voltage Drop(Note2)		V_F	Typ.	Max.	V
at I_F=3A	TA=25°C		0.42	-	
	TA=125°C		0.34	-	
at I_F=5A	TA=25°C		0.46	-	
	TA=125°C		0.41	-	
at I_F=10A	TA=25°C		0.56	0.60	
	TA=125°C		0.49	-	
Maximum Reverse Current at V_R=45V	TA=25°C	I_R	40	100	μA
	TA=125°C		12	-	mA

Note2:Pulse test: 300 μs pulse width, 1 % duty cycle

RATINGS AND CHARACTERISTIC CURVES

FIG.1 MAXIMUM FORWARD CURRENT DERATING CURVE

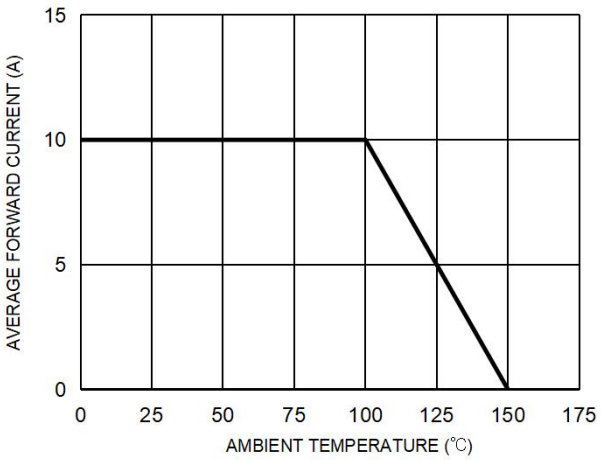

FIG. 2 MAXIMUM NON-REPETITIVE FORWARD SURGE CURRENT PER LEG

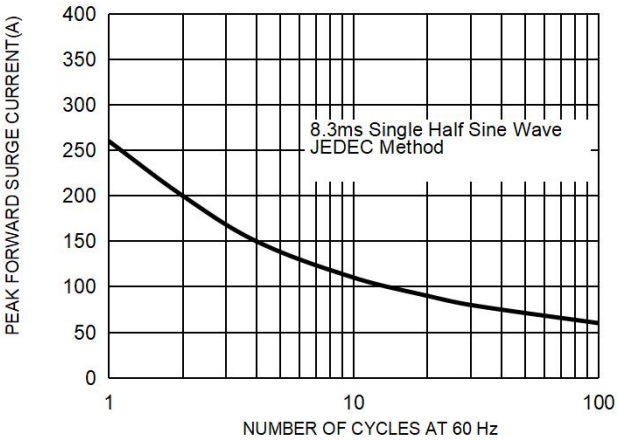

FIG. 3 TYPICAL FORWARD CHARACTERISTICS PER LEG

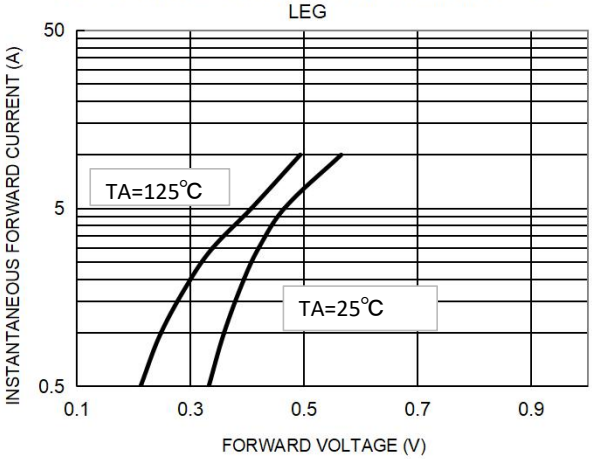

FIG. 4 TYPICAL REVERSE CHARACTERISTICS PER LEG

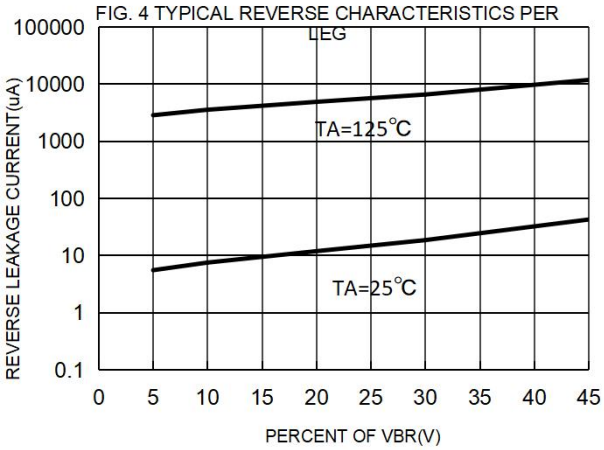

Package Outline Dimensions millimeters

TO-220AB

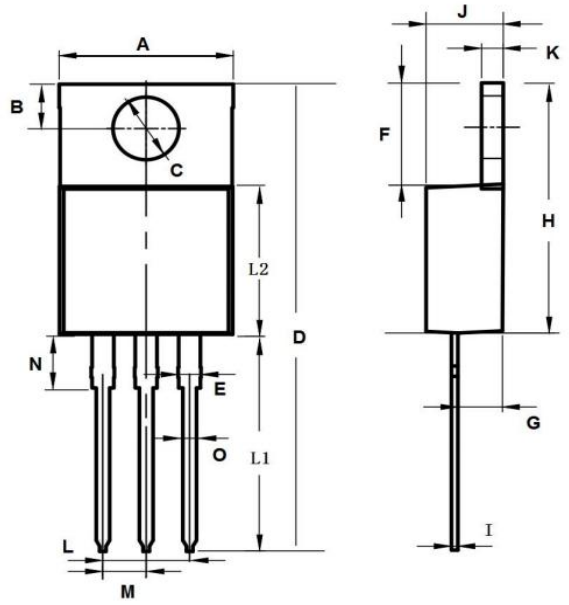

Dim.	Min.	Max.
A	10.15	10.35
B	2.50	2.95
C	3.70	3.90
D	28.5	29.5
E	1.20	1.40
F	6.20	6.55
G	2.85	3.25
H	15.0	16.0
I	0.35	0.42
J	4.3	4.55
K	1.2	1.4
L	Typ5.08	
L1	13	14
L2	8.5	9.5
M	Typ2.54	
N	2.8	3.5
O	0.70	0.90
All Dimensions in millimeter		

TO-220F

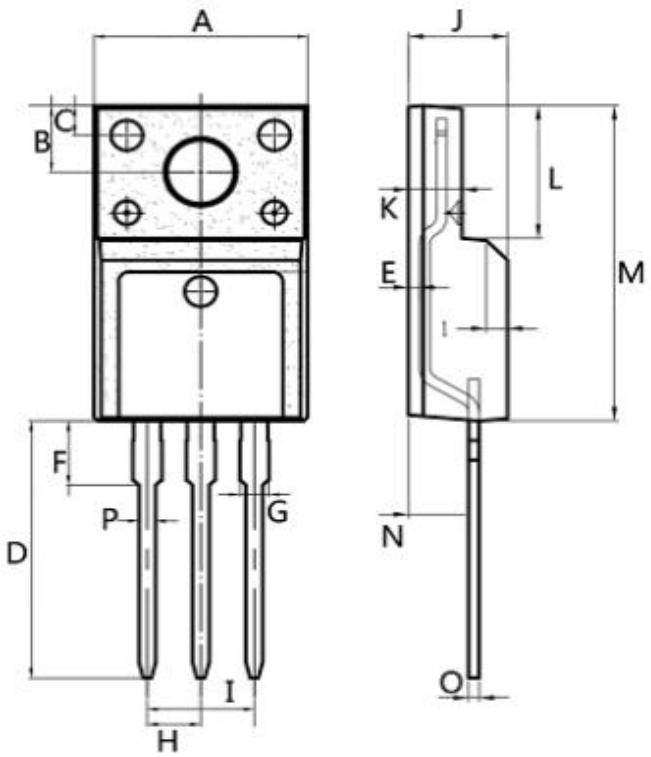

Dim.	Min.	Max.
A	9.95	10.25
B	2.95	3.25
C	1.25	1.45
D	12.80	13.20
E	0.40	0.60
F	2.8	3.5
G	1.30	1.45
H	Typ 2.54	
I	Typ 5.08	
J	4.5	5.0
K	2.45	2. 65
L	6.5	6.8
M	15.4	16.0
N	2.75	3.05
O	0.45	0.55
P	0.70	0.90
All Dimensions in millimeter		

Package Outline Dimensions millimeters

TO-263

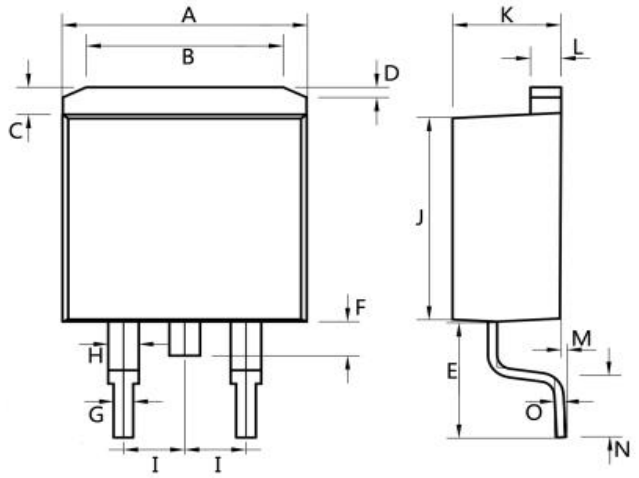

Dim.	Min.	Max.
A	10.10	10.35
B	6	8
C	1.2	1.5
D	0.55	1.0
E	4.3	5.3
F	1.4	1.6
G	0.75	0.85
H	1.2	1.5
I	Typ2.54	
J	8.5	9.5
K	4.3	4.55
L	1.25	1.35
M	0.02	0.23
N	2.2	2.8
O	0.3	0.4
All Dimensions in millimeter		

TO-252

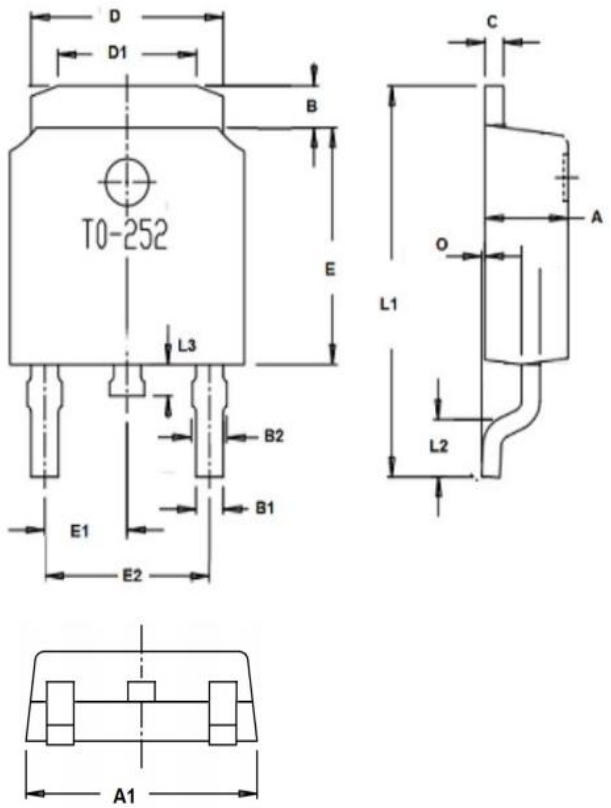

Dim.	Min.	Max.
A	2.1	2.5
A1	6.3	6.9
B	0.95	1.55
B1	0.6	0.8
B2	0.75	0.95
C	Typ0.5	
D	5.3	5.5
D1	3.65	4.05
E	5.8	6.4
E1	Typ2.3	
E2	Typ4.6	
O	0	0.15
L1	9	11
L2	Typ1.5	
L3	0.7	1.0
All Dimensions in millimeter		

Package Outline Dimensions millimeters

TO-251

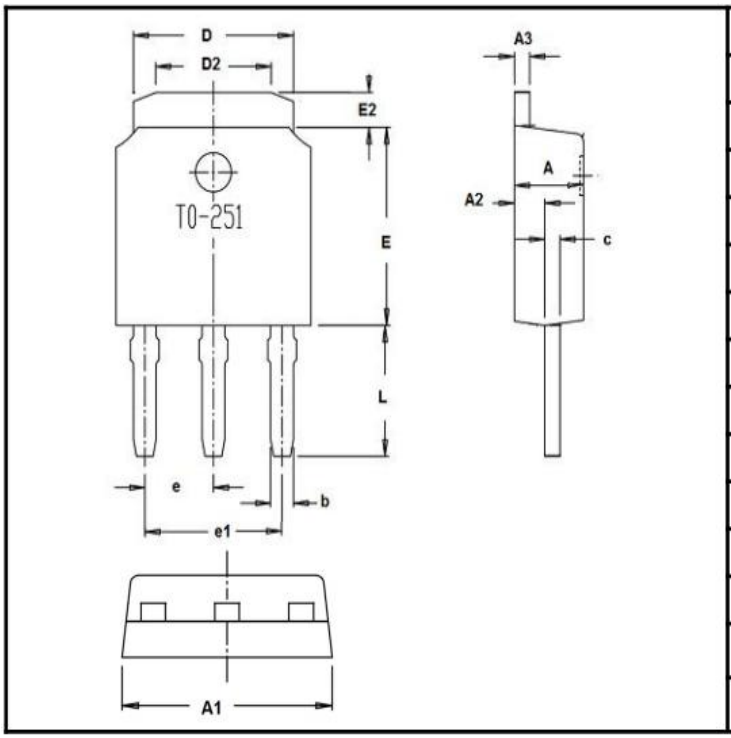

Dim.	Min.	Max.
A	2.1	2.5
A1	6.3	6.9
A2	0.9	1.1
A3	Typ0.5	
b	0.6	0.8
c	0.4	0.5
D	5.3	5.5
D2	3.65	4.05
E	5.8	6.4
E2	0.9	1.4
e	Typ2.29	
e1	Typ4.58	
L	3.7	4.3
All Dimensions in millimeter		

Marking on the body

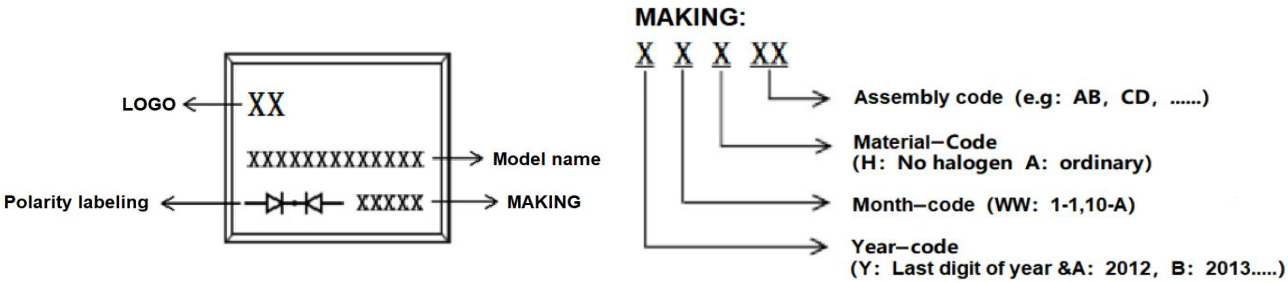

Ordering information

Part Number	Package	Unit Weight	Base Quantity	Delivery mode
MBR2045CT	TO-220AB	0.07oz(1.96g)	50 pcs / tube	1000pcs/box 5000pcs/carton
MBR2045FCT	TO-220F	0.06oz(1.74g)	50 pcs / tube	1000pcs/box 5000pcs/carton
MBR2045DC	TO-263	0.04oz(1.16g)	50 pcs / tube	1000pcs/box 5000pcs/carton
MBR2045DC-R	TO-263	0.04oz(1.16g)	800 pcs / reel	1600pcs/box 8000pcs/carton
MBR2045CS	TO-252	0.011oz(0.32g)	2500 pcs / reel	5000pcs/box 25000pcs/carton
MBR2045D	TO-251	0.011oz(0.32g)	80 pcs / tube	4000pcs/box 24000pcs/carton

Note: For Halogen Free molding compound, add "H" suffix to part number above.

packing instruction

PKG	最小包装	内盒	外箱
TO-220AB TO-220F TO-263	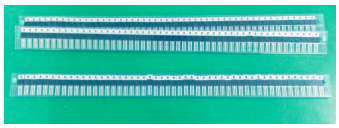	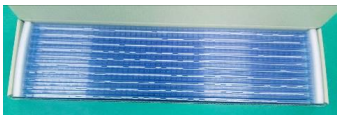	
	50pcs/管	1000pcs/盒	5000pcs/箱
TO-263-R		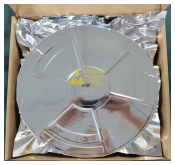	
	800pcs/盘	1600pcs/盒	8000pcs/箱
TO-252	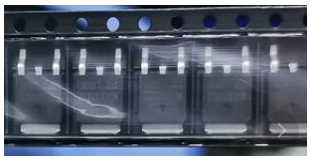		
	2500pcs/盘	5000pcs/盒	25000pcs/箱
TO-251	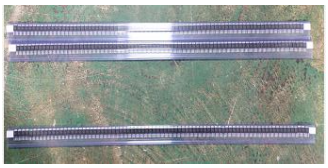		
	80pcs/管	4000pcs/盒	24000pvs/箱

Notice

1. All product,product specifications and data are subject to change without notice to improve.The right to explain is owned by LINGXUN electronics company.

2. Confirm that operation temperature is within the specified range described in the product specification. Avoid applying power exceeding normal rated power;

exceeding the power rating under steady-state loading condition may negatively affect product performance and reliability.

3. LINGXUN electronics shall not be in any way responsible or liable for failure induced under deviant condition from what is defined in this document.